技术数据表

[redacted]

PI

IC,

R H RO

This product c ins gh-speed and high sensitivity pin photo diode and Low power consumption, high gain Preamplifier Ic Adopting epoxy resin plastic encapsulated semi circular spherical packaging Dual shielding and anti-interference design for both inside and outside,This product has been certified by Reach and Rohs as an environmentally friendly product, Used as a receiver in infrared remote control systems

特点（ ：

*

Small volume epoxy plastic packaging

* * * * : 12.5*10*5.6*16mm

Appearance dimension length * width * height* foot length : 12.5*10*5.6*16mm.

* 2.7-5.5V

Wide working voltage, 2.7-5.5V

*

Low power consumption; Wide angle and long-distance reception

*

withstand environmental interference

* TTL CMOS

Output matching TTL, CMOS level, low level effective

应用领域（ ）：

*

Household appliances (air conditioning, fans, heaters, humidifiers)

* DVD DVD

Multimedia audiovisual equipment (TV, DVD, set-top box, car mounted mobile DVD, hard drive player

*

Computers and peripheral equipment, induction sanitary ware

*

Industrial Contro*lyGttrime ntaloni

目录

Catalogue

电性参数

典型特性曲线

可靠性实验

外形尺寸

包装

使用注意事项

电性参数

Supply Voltage	VDD	6.0	V

Recommended usage conditions

Supply Voltage	VDD	2.7	-	5.5	V
input frequency	FM	-	37.9	-	KHZ
Operating temperature	Topr	-	25	-	ÁC

Application circuit diagram

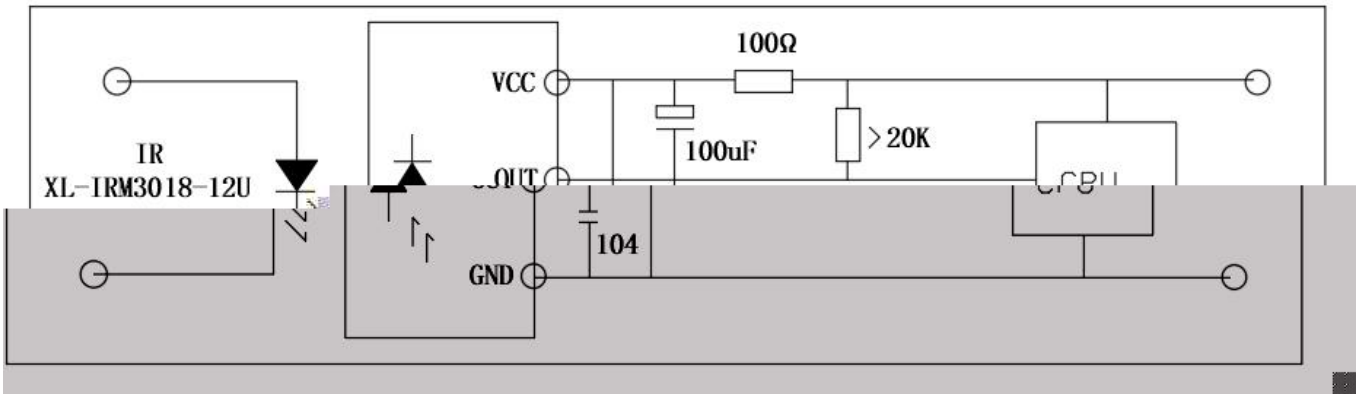

schematic diagram

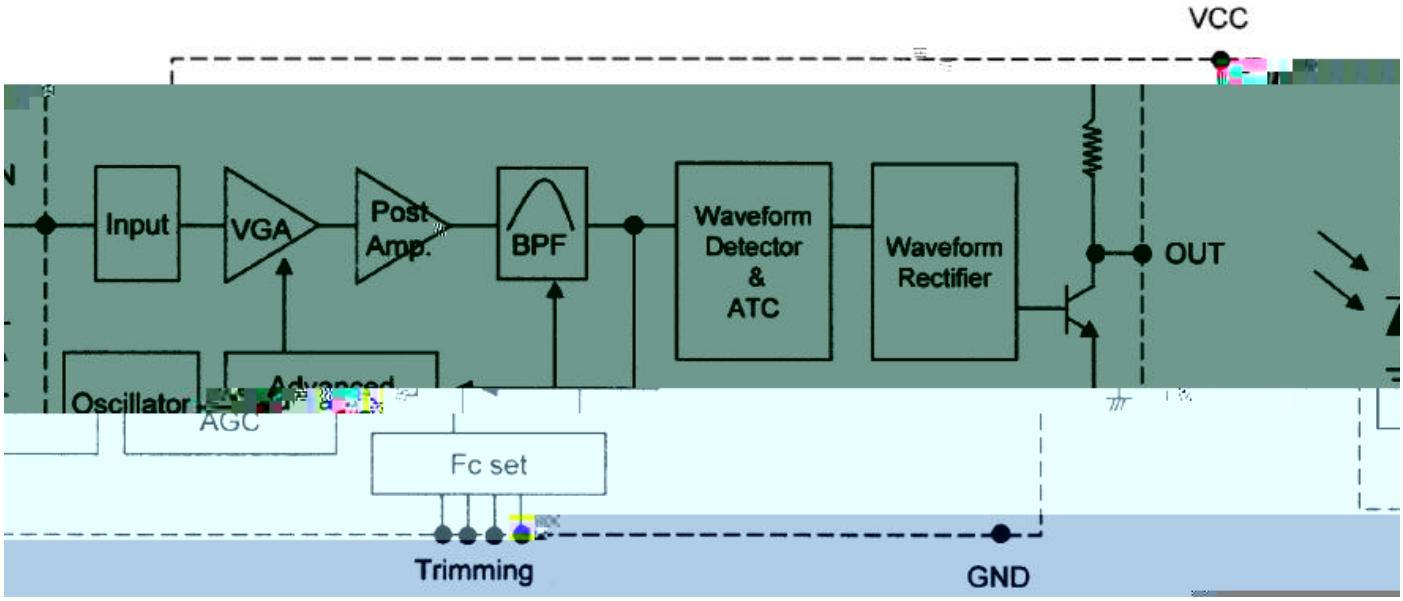

Receiving angle testing method

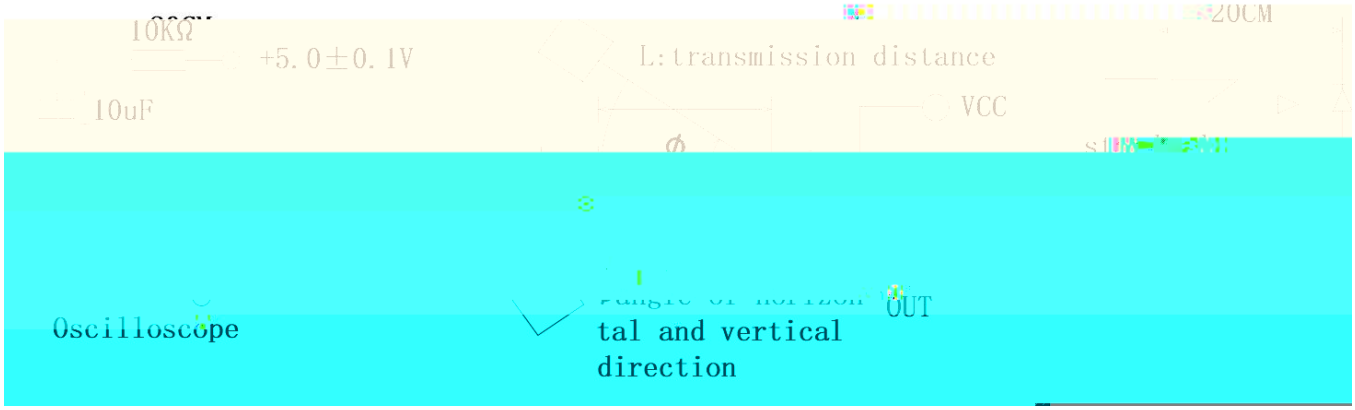

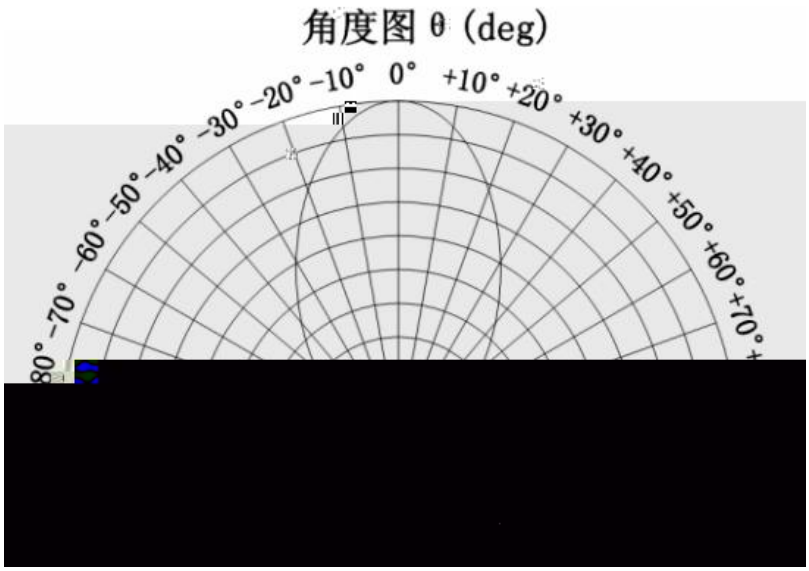

接收距离分档

代码	最小值	最大值	单位	测试条件
L1	6	8	M	ICC=0.5mA
L2	10	15		
L3	15	20		

工作电压分档

代码	最小值	最大值	单位	测试条件
V1	2.5	5.5	V	ICC=0.5mA
V2	2.7	5.5		

工作电流分档

代码	最小值	最大值	单位	测试条件
I1	0.3	0.5	mA	VDD=5V
I2	0.4	0.7		

可靠性试验

Reliability Test Items And Conditions

* Reliability Test Project

	260 ±5	5	20	20
	100PF 1.5KΩ, 4KV,		20	20
	10-50HZ/1min 1.5mm X Y Z/30min	30	20	20
	85 ±2	240	20	20
	-20 ±2	240	20	20

外形尺寸

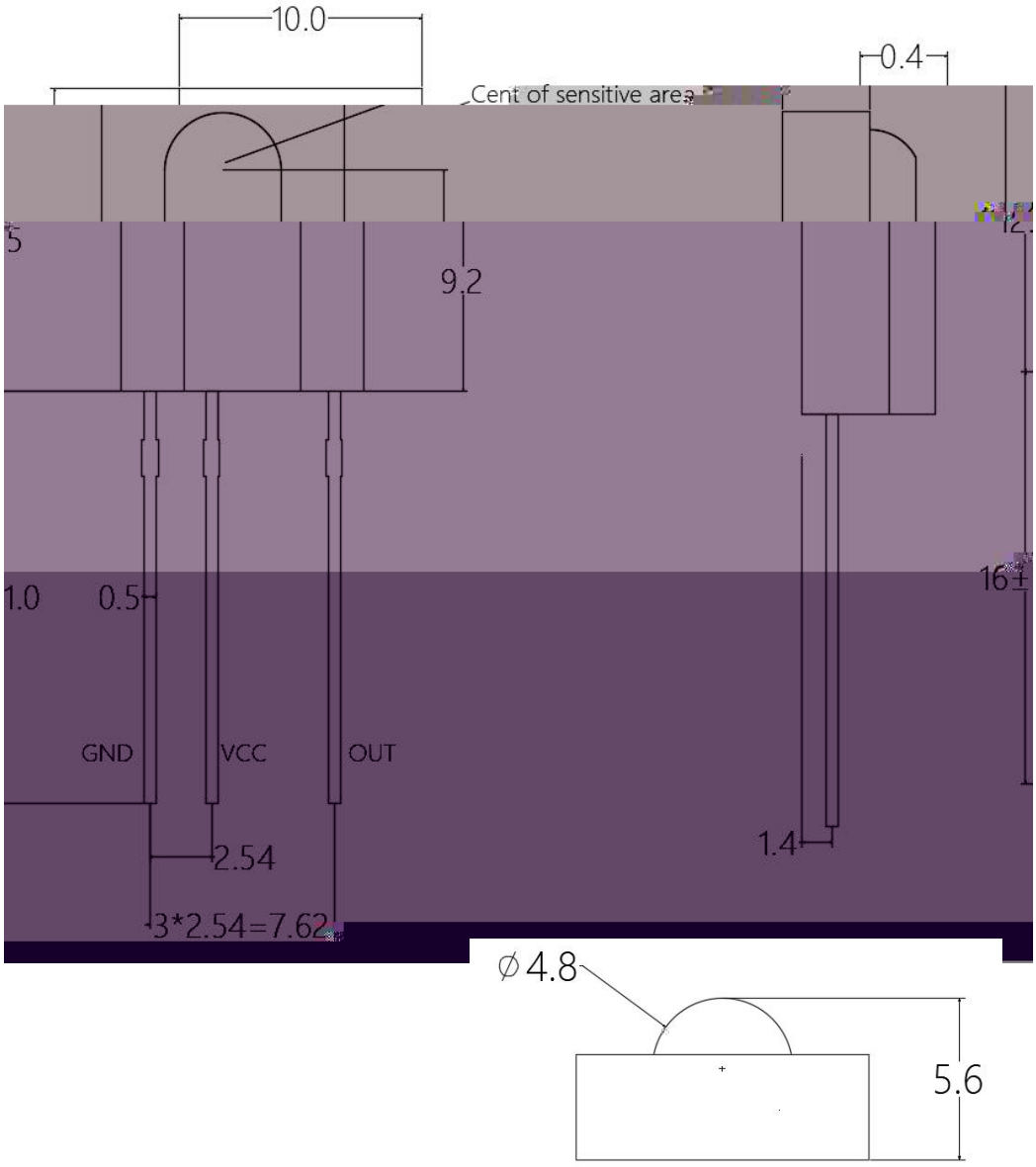

(Note)

1.

Dimensions are in millimeters.

2. Ñ 0.25mm .

Tolerances unless mentioned are Ñ 0.25mm.

包装

*

In Bags

*

Moisture Proof and Anti-Electrostatic Foil Bag

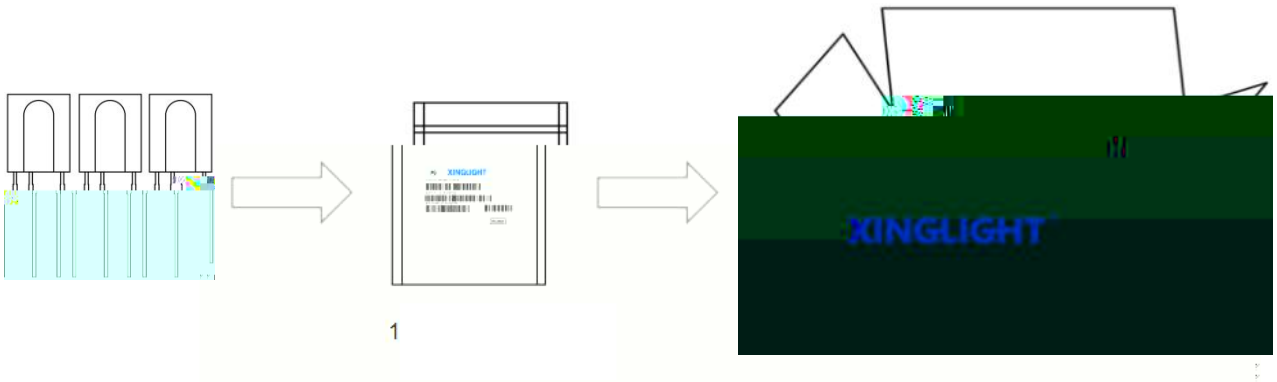

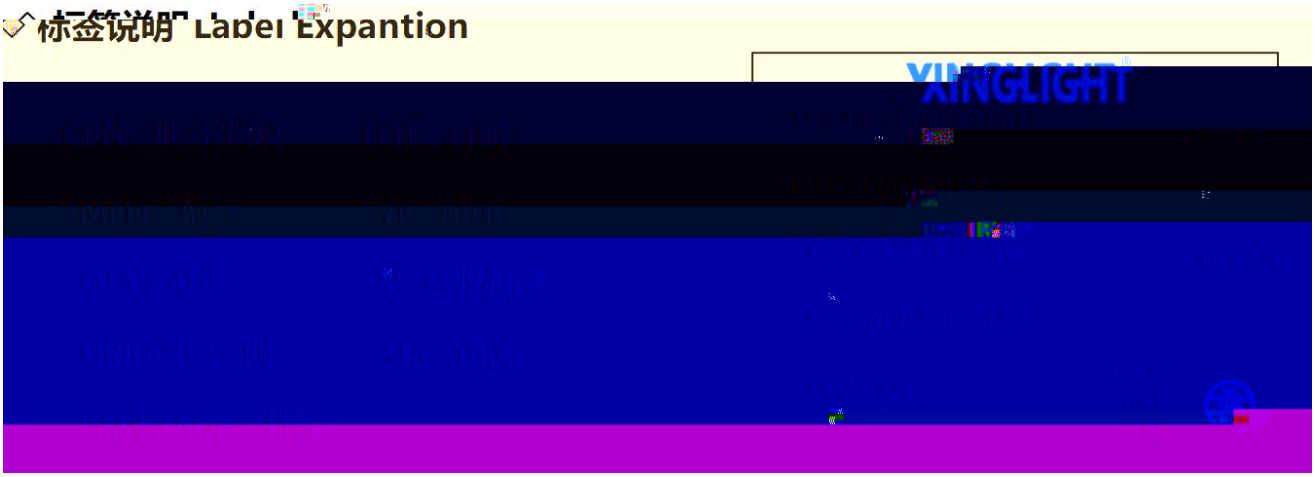

使用注意事项（ ）

1

LED

This Infrared receiver head can be used in some ordinary electronic equipment, such as office equipment, communication equipment, house decoration, if LED is used in some

使用注意事项（ ）
(使用注意事项)