3535 球头绿光 3W

特点（C ）：

* L/W/H 3.5*3.5*2.2mm

Outline Dimensions (L / w / h):3.5*3.5*2.2mm

* : /

Luminous color and colloid: Green/Transparent colloid

*

High light

电性参数 Electrical Parameter

Absolute Maximum Rating

Power Dissipation	3000	mW
Forward current	700	mA
Electrostatic Discharge	2000	V
Operation Temperature Range	-40 TO +105	
Storage Temperature Range	-40 TO +85	
Lead Soldering Temperature	260 ≤ 6S	

光电参数 Ta=25 Optical-electrical parameter

pisa i

Parameter	Symbol	Test conditions	Min	Typ

外形尺寸

Outline Dimension

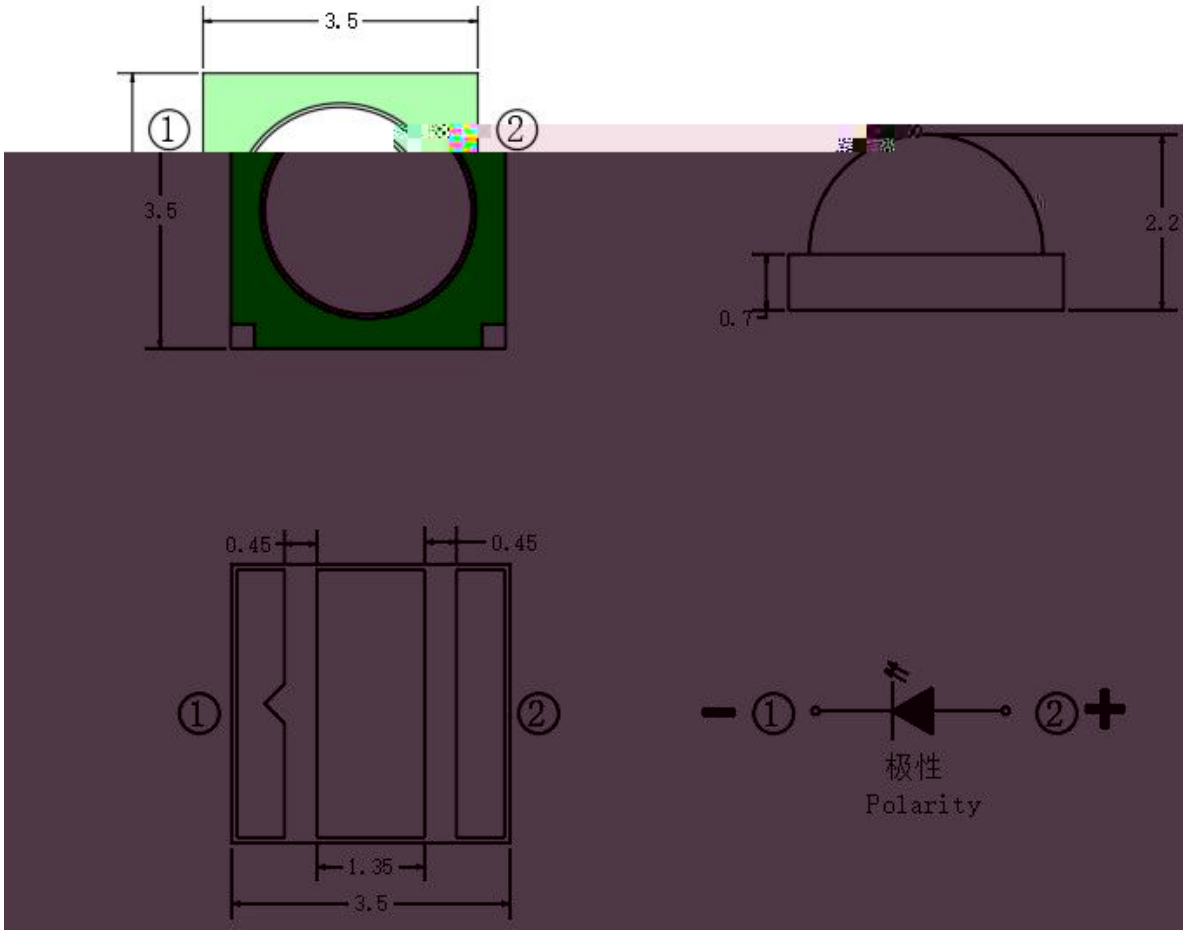

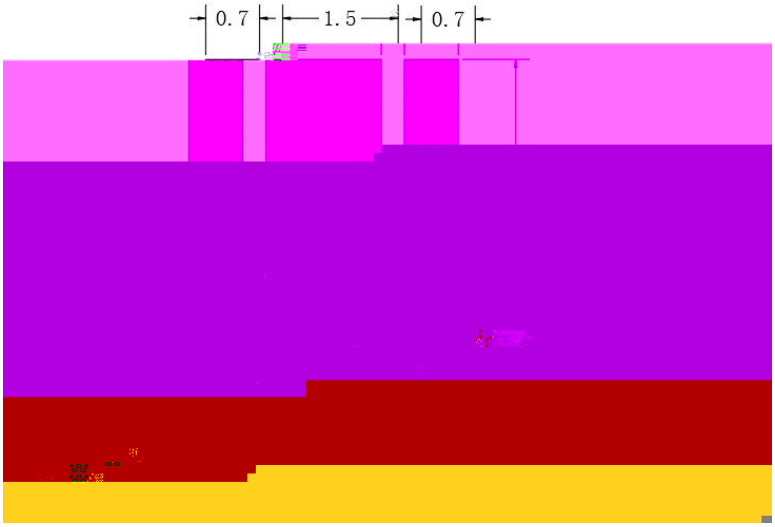

All dimensions are in millimeters.

Tolerance is 0.25mm unless otherwise noted

包装（1）

Packaging (1)

载带与圆盘尺寸

300 3

LED

Manual welding

焊接指导（2）

Guideline for Soldering (2)

清洗：

30 3 50

30

LED

300W LED

LED

It is recommended that alcohol be used as a solvent for cleaning after soldering. Cleaning is to go under 30 for 3 minutes or 50 for 30 seconds. When using other solvents, it should be confirmed beforehand whether the solvents will dissolve the package and the resin or not.

Ultrasonic cleaning is also an effective way for cleaning. But the influence of Ultrasonic cleaning on LED depends on factors such as ultrasonic power. Generally, the ultrasonic power should not be higher than 300W. Before cleaning, a pretest should be done to confirm whether any damage to LEDs will occur.

* 注意：PCB

* This general guideline may not apply to all PCB designs and configurations of all soldering equipment. The technics in practise is influenced by many factors, it should be specialized base on the PCB designs and configurations of the soldering equipment..

[redacted]

Moisture proof and anti-electrostatic package with moisture absorbent material is used, to keep moisture to a minimum.

30 60%RH

Before opening the package, the product should be kept at 30 or less and humidity less than 60% RH, and be used within a year.

30 40%RH 168 7

30 60%RH

After opening the package, the product should be stored at 30 or less and humidity less than 40%RH, and be soldered within 168 hours (7 days). It is recommended that the product be operated at the workshop condition of 30 or less and humidity less than 60%RH.

LED

60 5 24

If the moisture absorbent material has fade away or the LED's have exceeded the storage time, baking treatment should be performed based on the following condition: (60 5) for 24 hours.

静电:

Static electricity or sur ŭm "