目录

Catalogue

电性参数

Consumed power	Pd	70	mW
Max Continuous Forward Current	IF	20	mA
Peak Forward Current	IFp	80	mA
Operating ambient temperature	Topr	-20 C ~ +85 C	
Storage ambient temperature	Tstg	-40 C ~ +85 C	
Welding conditions	Tsol	reflow soldering 240°C 6s manual welding 300°C 3s 2.0mm	

Luminous Intensity	Iv	20000	30000	35000	mcd	IF=20mA
Dominant Wave Length	λd	515	520	530	nm	IF=20mA
Peak Wave Length	λp	/	525	/	nm	IF=20mA
Forward Voltage	VF	2.8	3.0	3.4	V	IF=20mA
Viewing Angle	2Ø1/2	/	30	/	deg	IF=20mA
Spectral Width at half height	λ	/	30	/	nm	IF=20mA
Reverse Current	IR	/	/	≤10	μA	VR=5V

±10% ±0.1V (X,Y) ±0.01 ±1nm

Note: the light intensity error is 10%; The pressure drop error is ±0.1V ; (X,Y) coordinate deviation ±0.01 wavelength error ±1 nm.

亮度分档

：

代码	最小值	最大值

电压分档

：

波长分档

典型特性曲线

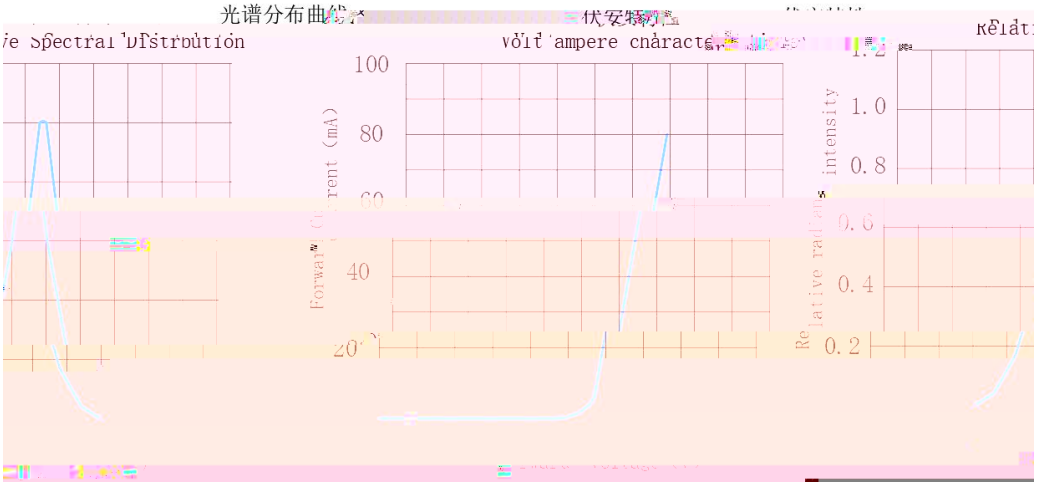

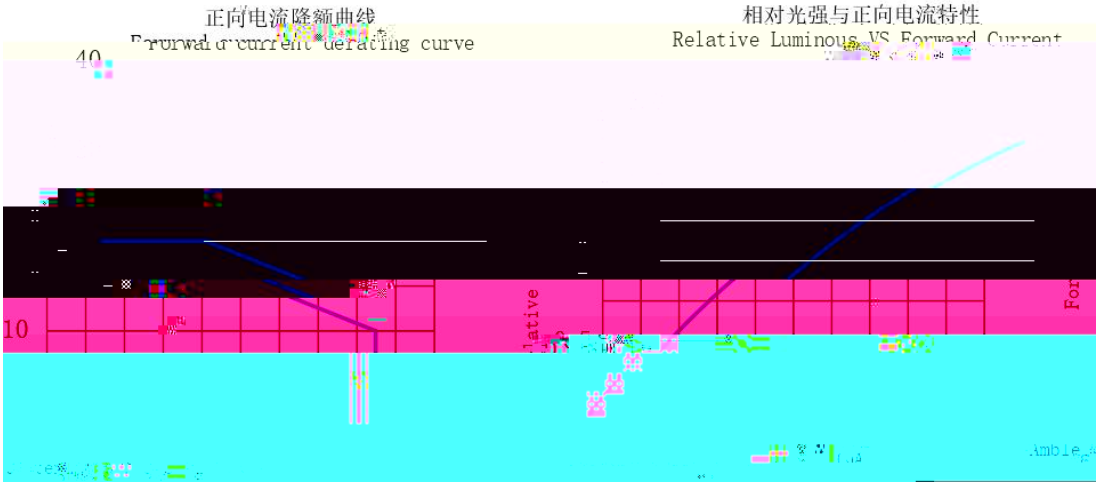

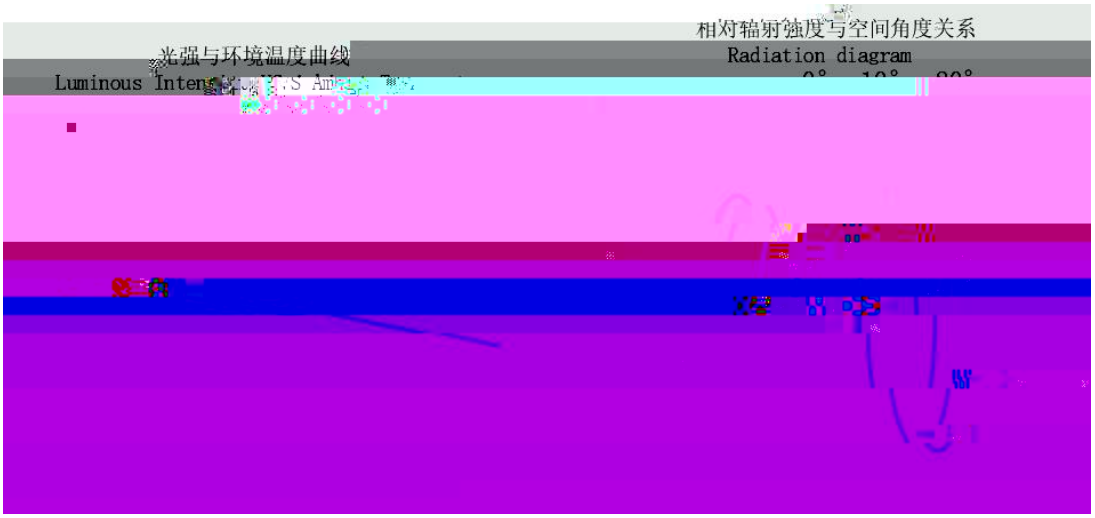

25±5 /Note If not otherwise indicated the test environment temp erature is 25±5

可靠性试验

Reliability Test Items And Conditions

Class	Test item	Testing environment	Testing time	Qty	Failqty
Endurance test	Working life	Ta=25 ±5 ,IF=20mA	1000hrs	22 PCS	0/1
	High temperature and high humidity experiment	Ta= 85±5 , RH= 85 90%	1000hrs	22 PCS	0/1
	High-temperature storage	Ta= 85±5	1000hrs	22 PCS	0/1
	Low temperature storage	Ta= -40±5	1000hrs	22 PCS	0/1
Environmental testing	Cold and hot cycle	100 ±5 30mins 5mins -40 ±5 30mins	100 Circles	22 PCS	0/1
	Hot and cold impact	105 ±5 5mins -45 ±5 5mins	100 Circles	22 PCS	0/1
Mechanical Test	Resistance to Soldering Heat	T.sol= 250 ± 5	2times	22 PCS	0/1
	Lead Integrity	Load 2.5N(0.25kgf) 0°~ 90° ~0°	3times	22 PCS	0/1

外形尺寸

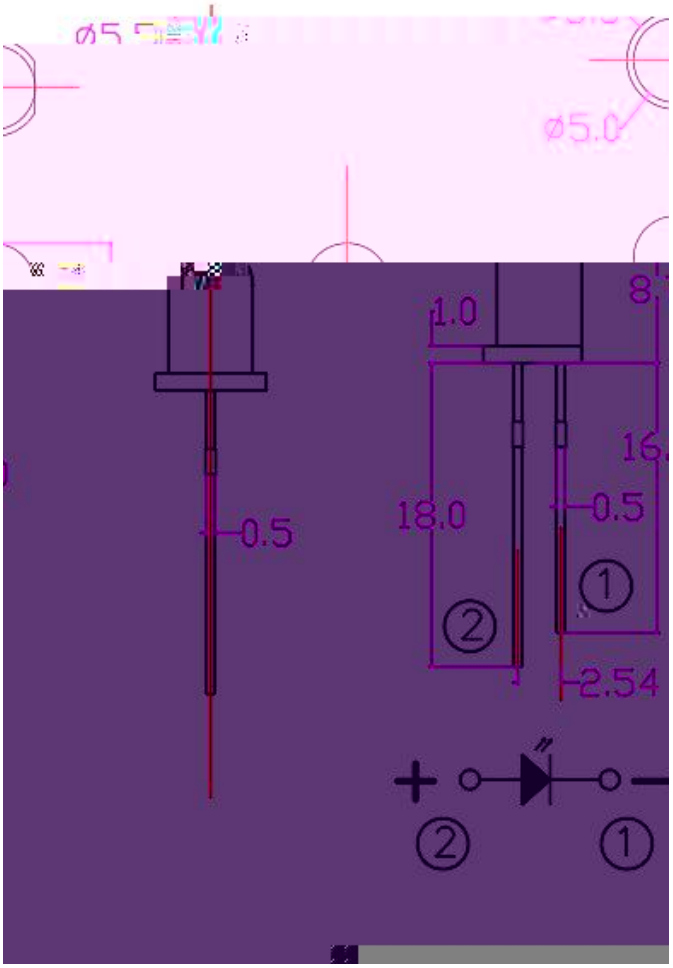

(Note)

1.

Dimensions are in millimeters.

2. ± 0.50mm .

Tolerances unless mentioned are ± 0.50mm.

使用注意事项(2)

8、其他事项：

*

*When handling the product, touching the encapsulant with bare hands will not only contaminate its surface, but also affect on its optical characteristics. Excessive force to the encapsulant might result in catastrophic failure of the LEDs due to die breakage or wire deformation. For this reason, please do not put excessive stress on LEDs, especially when the LEDs are heated such as during Reflow Soldering.

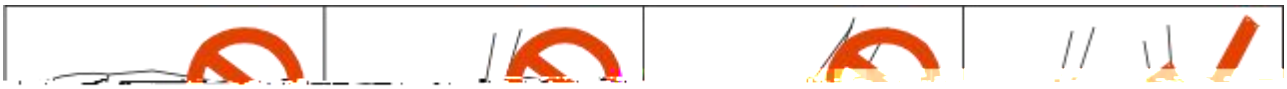

*LED

*The epoxy resin of encapsulant is fragile, so please avoid scratch or friction over the epoxy resin surface. While handling the pro[illegible] do n[illegible] oxy resin, be careful.