[redacted]

[redacted] 1204 ba[redacted]terior[redacted]gh-quali[redacted]en[redacted]MC an[redacted]igh-qual[redacted] RGB [redacted]D chips, [redacted]ch are [redacted]n si[redacted]e and [redacted]im[redacted] peri[redacted]ery.

BUILT-IN IC [redacted]nstant cur[redacted]t high pre[redacted]GB chip pre[redacted]ocesvi[redacted]

目录

电性参数

[redacted]

可靠性实验

[redacted]

包装

[redacted]

使用注意事项

Part [redacted]

Electrical operating parameters define the DC and AC parameters of a device within its operating range and under testing conditions that ensure specific performance indicators. For parameters without given upper and lower limits, this specification does not guarantee their accuracy, but their typical values

CHAPTER ONE

典型特性曲线

Typical Characteristics Curves

光谱分布曲线

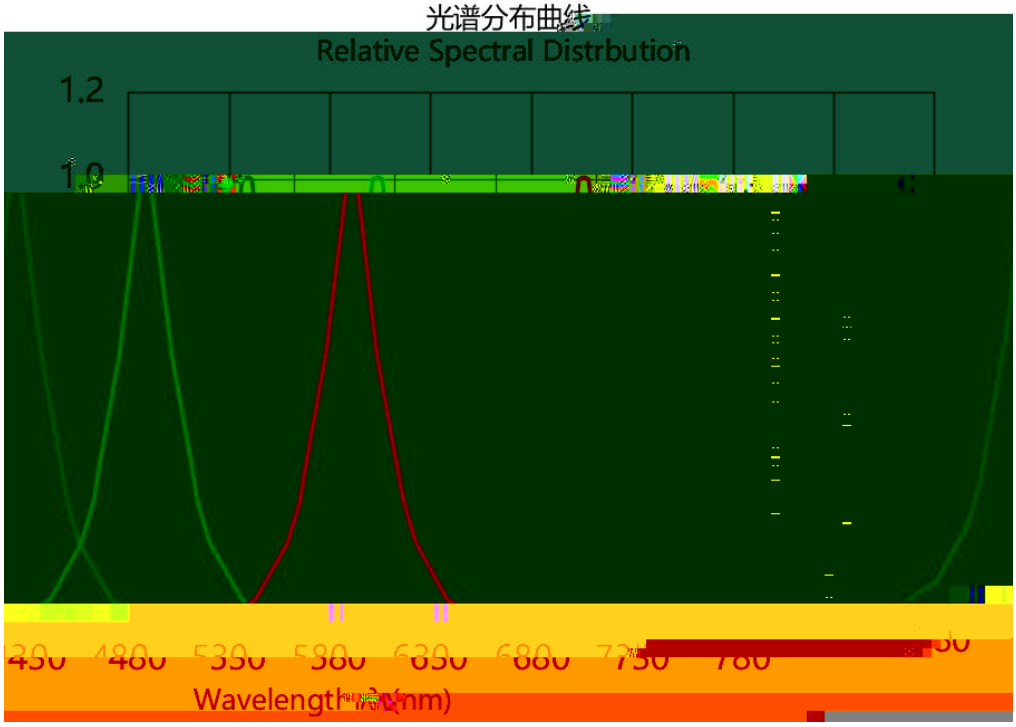

相对辐射强度与空间角度关系

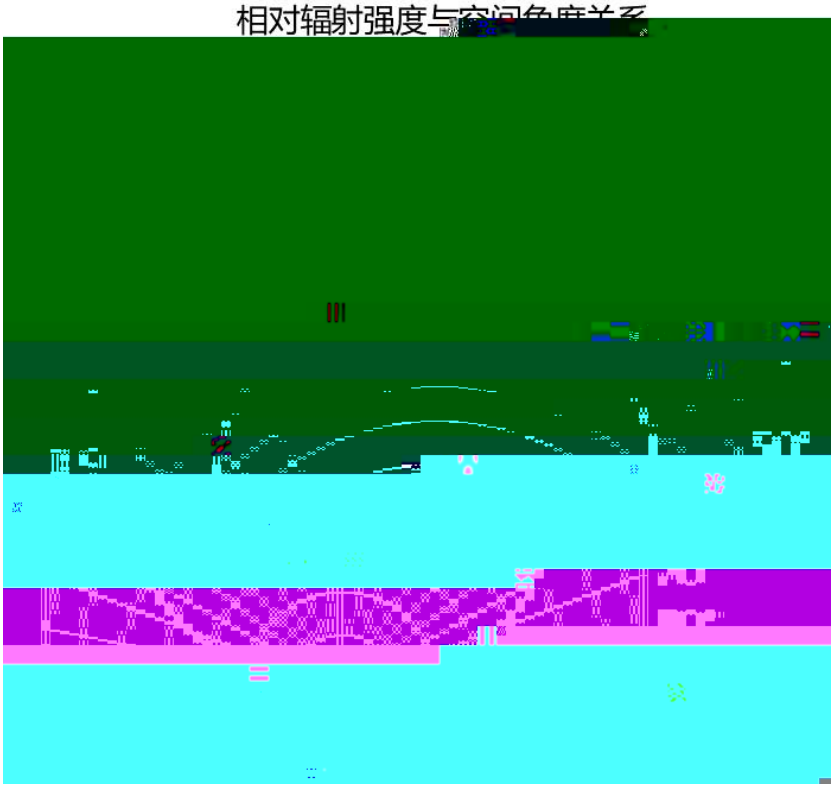

Part [redacted]

包装（1）

Packaging (1)

载带与圆盘尺寸

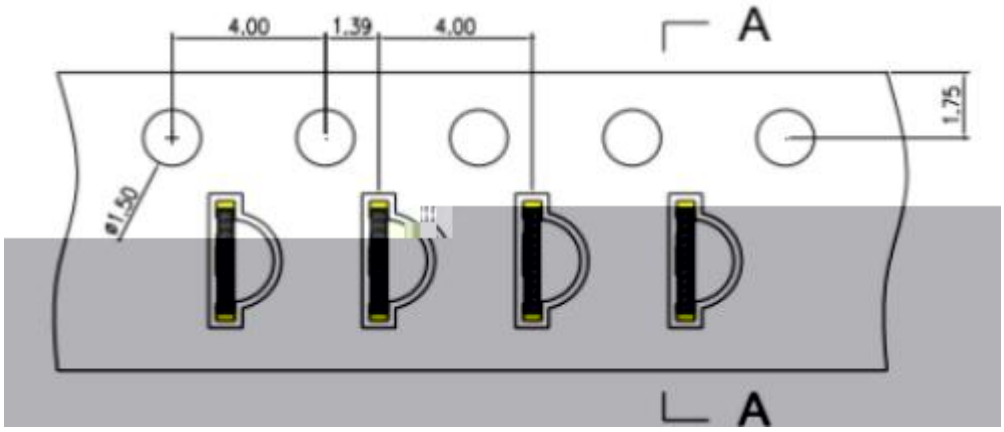

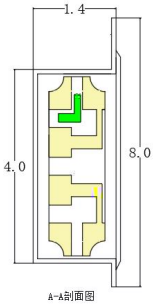

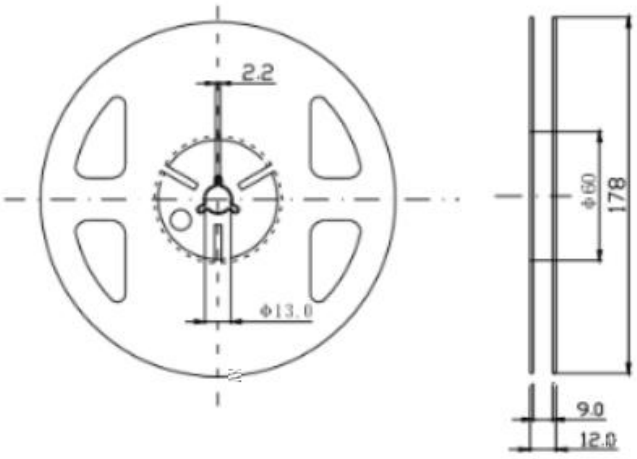

[redacted]

XINGLIGHT®

Part [redacted]

XINGLIGHT®

Part [redacted]

焊接指导（1）

Guideline for Soldering (1)

使用烙铁人手焊接

W

300 3

LED

Manual welding is recommended only for repair and heavy industry situations. A soldering iron of less than 30W is recommended to be used in Hand Soldering. Please keep the temperature of the soldering iron under 300 while soldering. Each terminal of the LED is to go for less than 3 second and for one time only.

Be careful because the damage of the product is

焊接指导（2）

Guideline for Soldering (2)

清洗： [redacted]

30 3 50

30

LED

300W LED

LED

It is recommended that alcohol be used as a solvent for cleaning after soldering. Cleaning is to go under 30 for 3 minutes or 50 for 30 seconds. When using other solvents, it should be confirmed beforehand whether the solvents will dissolve the package and the resin or not.

Ultrasonic cleaning is also an effective way for cleaning. But the influence of Ultrasonic cleaning on LED depends on factors such as ultrasonic power. Generally, the ultrasonic power should not be higher than 300W. Before cleaning, a pretest should be done to confirm whether any damage to LEDs will occur.

*** 注意：** PCB

* This general guideline may not apply to all PCB designs and configurations of all soldering equipment. The technics in practise is influenced by many factors, it should be specialized based

XINGLIGHT®

Part [redacted]