技术数据表

特点（ ）：

L/W/H :3.2*2.7*1.0 mm

Outline Dimensions (L / w / h): 3.2x 2.7 x 1.0mm

* : /

Luminous color and colloid: infrared receiver tube /black colloid

ROHS

Environmental protection products Complied With ROHS Directive

Moisture sensitivity level MSL : 3 levels

EIA

EIA standard packaging

*

High energy efficiency, fast startup

应用领域（ ）：

Infrared remote controller

Camera monitoring head

Industrial control: counters, thermal imaging, smart meter

Infrared photoelectric switch

Wireless communication and signal transmission

Intelligent car, robot

目录

Catalogue

电性参数

Power consumption	Pd	150	mW
Reverse Voltage	VR	32	V
Operating ambient temperature	Topr	-20°C ~ +85°C	
Storage ambient temperature	Tstg	-40°C ~ +85°C	
Welding conditions	Tsol		

典型特性曲线

功率与环境温度的关系
Power Dissipation

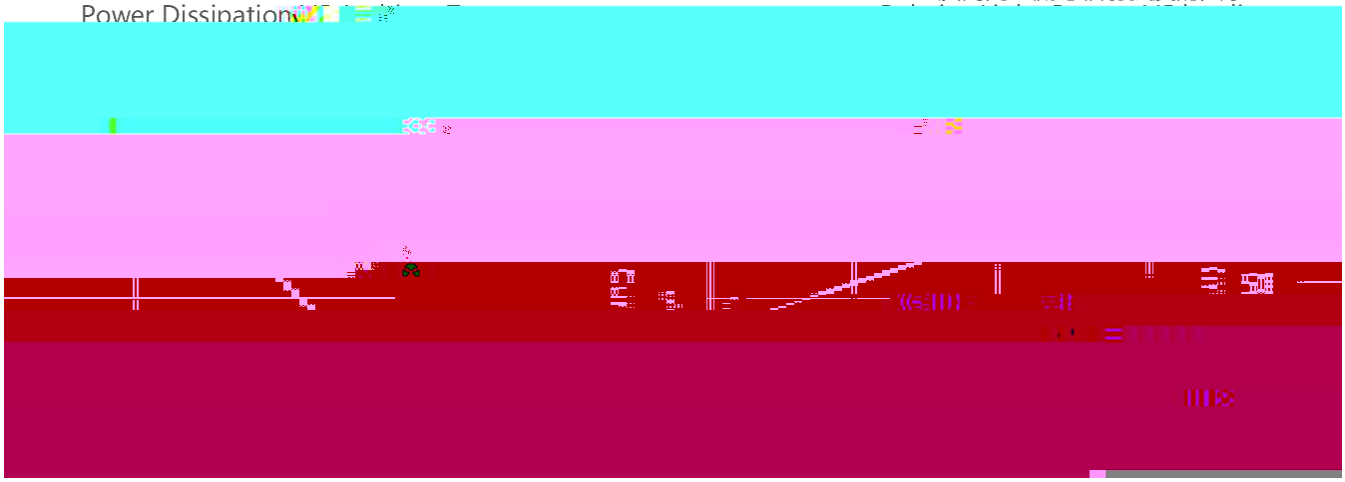

反向光电流与辐射强度的关系

暗电流与环境温度的关系
Dark Current VS Ambient Temperature

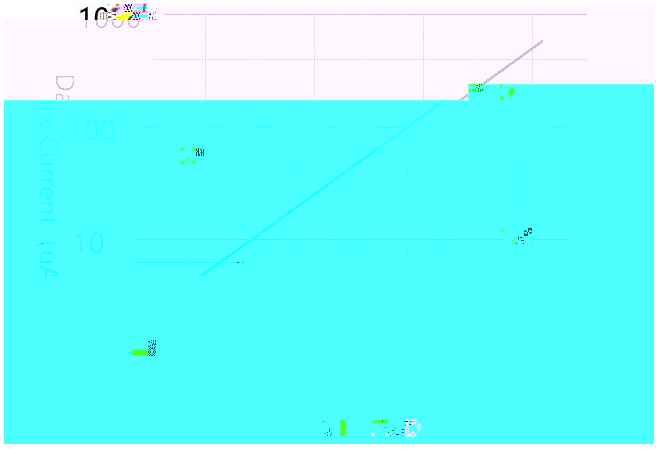

感应波长曲线图
Spectral Sensitivity

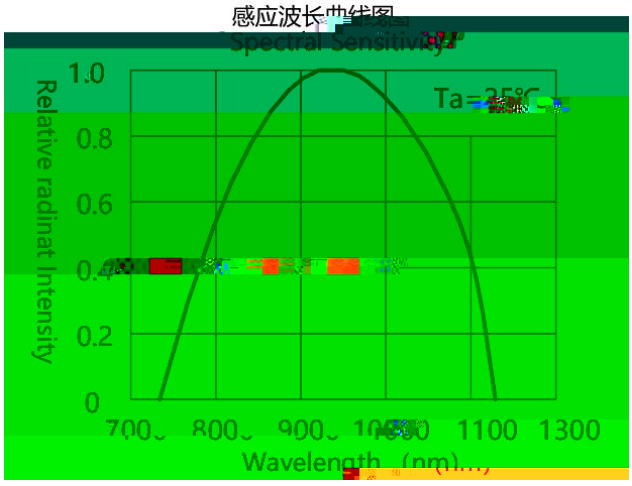

响应时间与负载电阻的关系

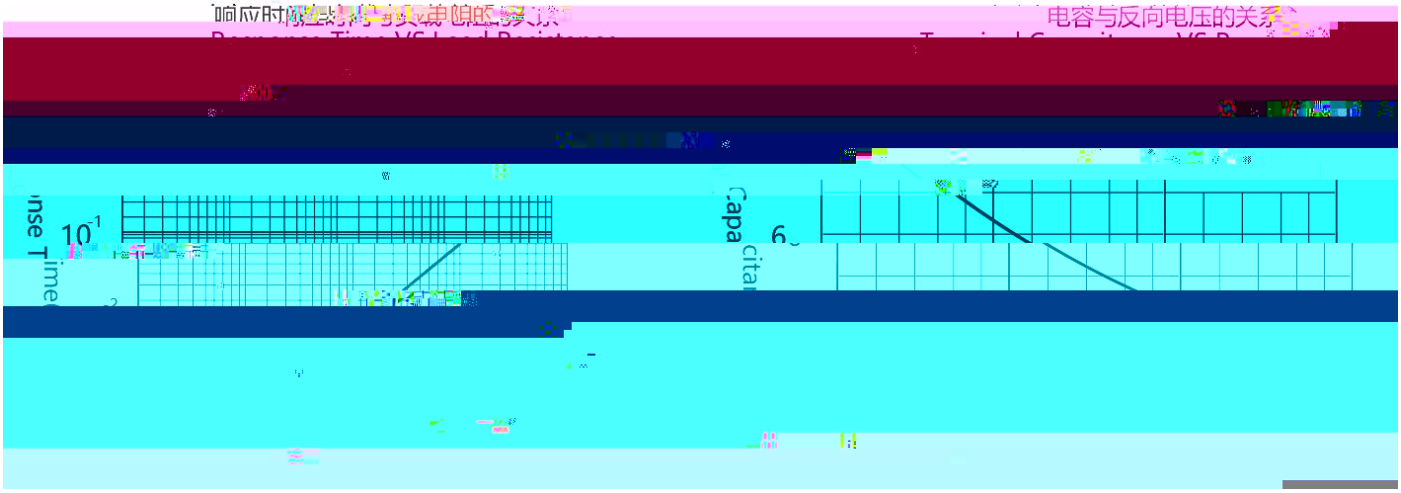

电容与反向电压的关系

外形尺寸

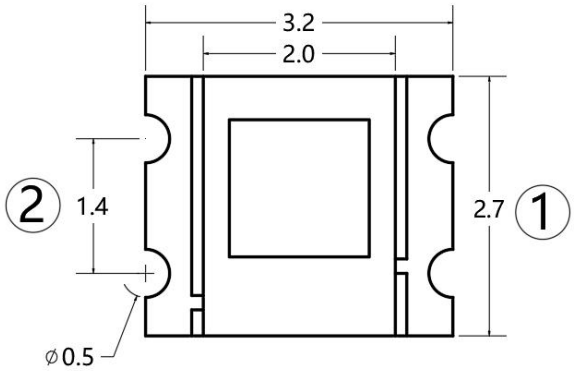

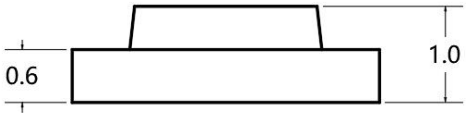

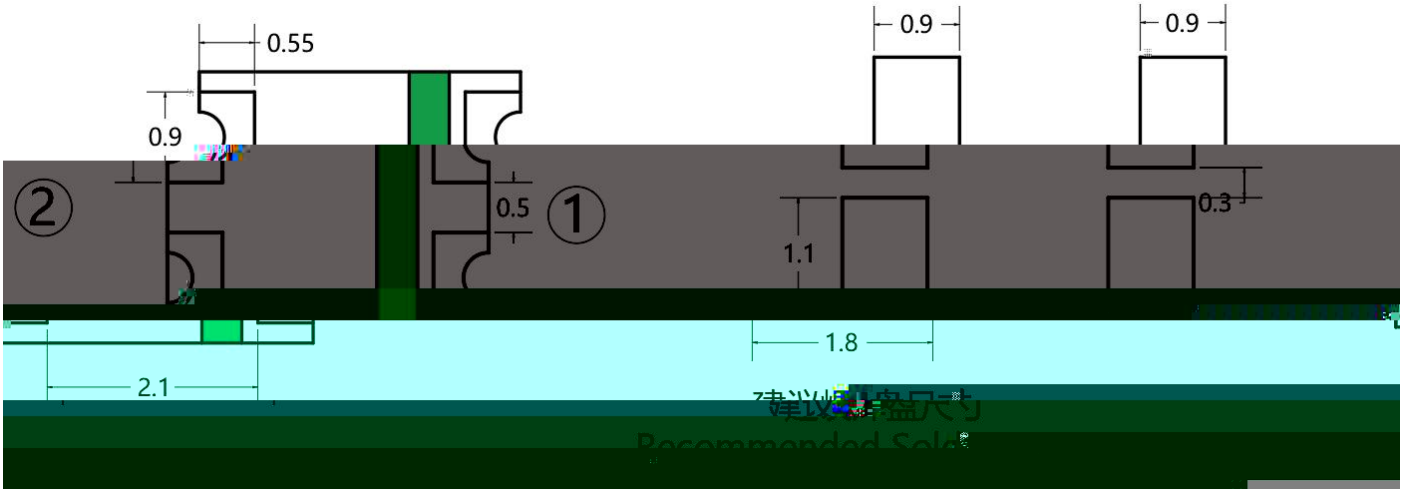

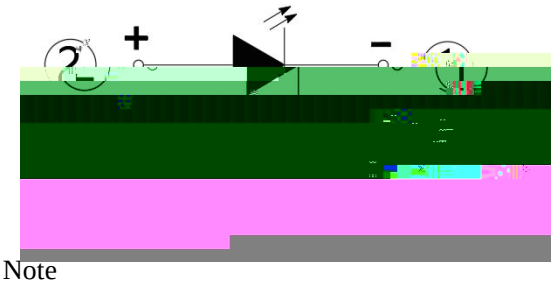

Note

Dimensions are in millimeters

2 ± 0.30mm

Tolerances unless mentioned are ± 0.30mm

包装（ ）

载带与圆盘尺寸

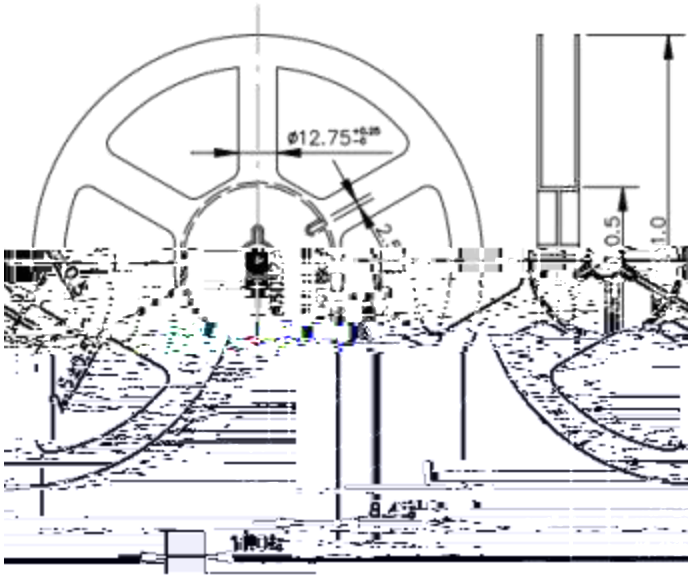

:

1. (mm)

1. Size unit is mm (mm).

2. ±0.1mm

The dimensional tolerance is ± 0.1mm.

包装（ ）

Moisture Proof and Antti-Electrostic Foil Bag

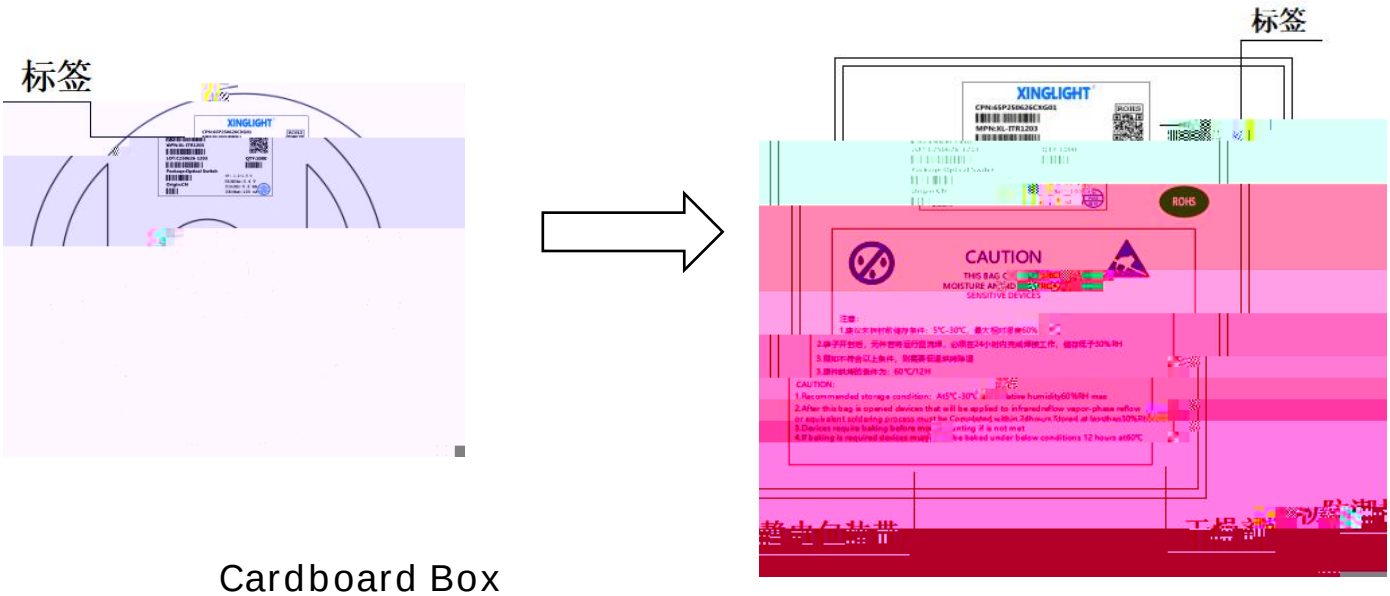

Cardboard Box

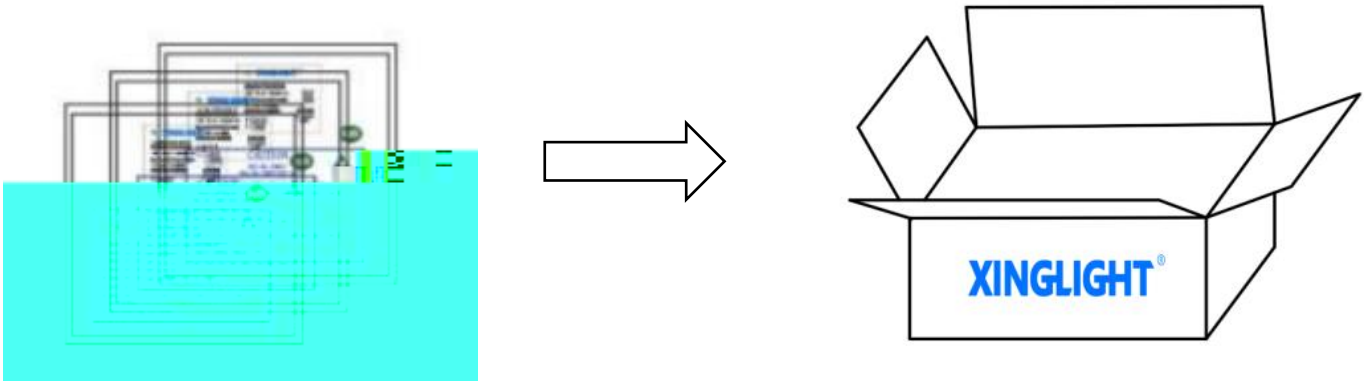

Label Expantion

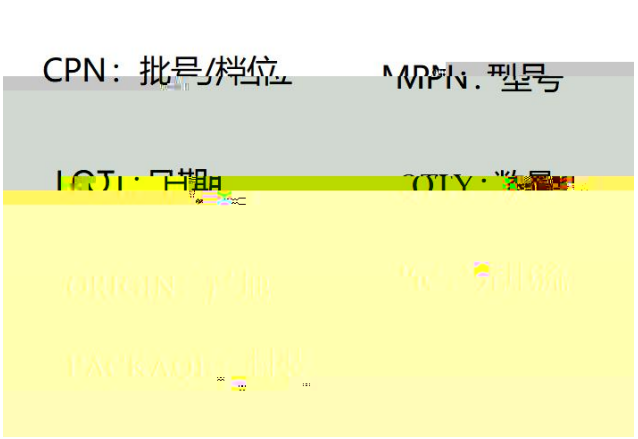

焊接指导

Guideline for Soldering

The wave peak welding curve is recommended :

Note

1

Lead solder temperature profile

2

It is recommended to perform reflow soldering once

3 LED

300 3 25W

Each terminal is to go to the tip of soldering iron temperature less than 300 for 3 seconds within once in less than the soldering iron capacity 25W. Leave two seconds and more intervals, and do soldering of each terminal. Be careful because the damage of the product is often started at the time of the hand solder.

*手工

LED ( )

LED

使用注意事项（2）

1. 贮存

[redacted]

Moisture proof and anti-electrostatic package with moisture absorbent material is used, to keep moisture to a minimum.

Before opening the package, the product should be kept at 30 or less and humidity less than 60% RH, and be used within a year.

After opening the package, the product should be stored at 30 or less and humidity less than 40%RH, and be soldered within