Part

可靠性试验

Reliability Test Items And Conditions

Class	Test item	Testing environment

包装（1）

Packaging (1)

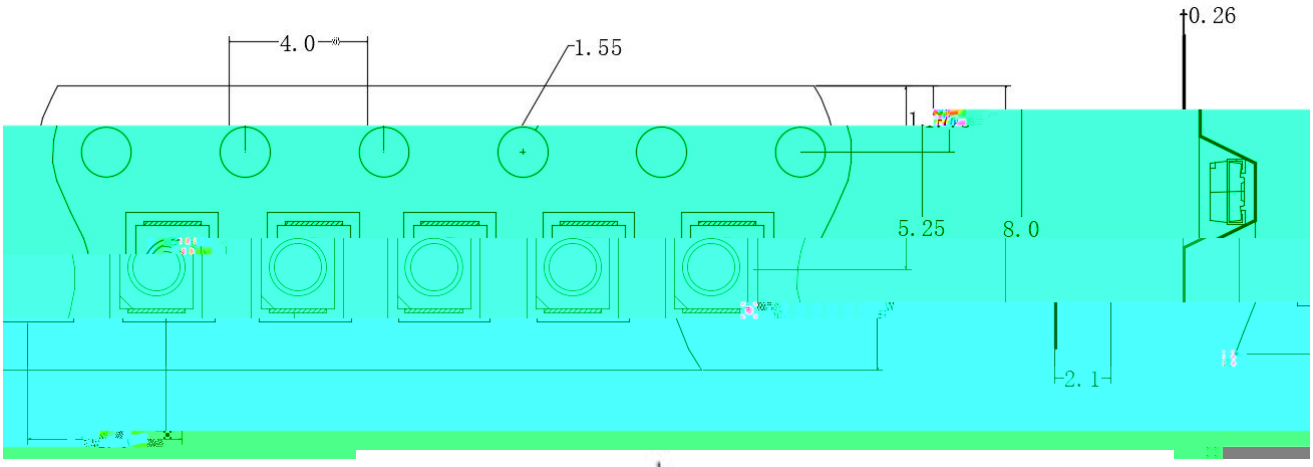

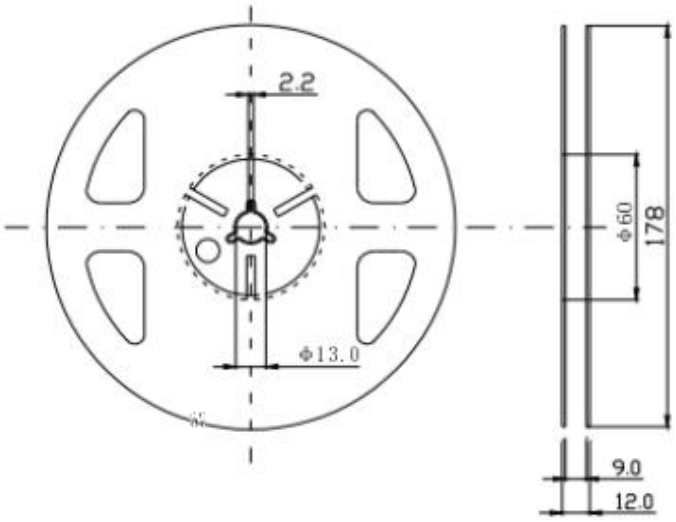

:

1. ㄚ β ㄐ (mm) Â
1. Size unit is mm (mm).
2. `E ±0.1mm Â
2. The dimensional tolerance is ± 0.1mm.

✧ 圆 及载带卷出方向及空穴规格 Disk and carrier belt direction of ro