Part

可靠性

Test

*Class item Testing environment

外形[illegible]寸

Outline Dimensi[illegible]

O ; Oö`By•7• cY@Ðy Ð m

' 1. Y,'; ٧ β شخ ٩ mm

Remarks: A \ `By•7 WY@Ð ÿf '™S| WY@Ð @ P

包装（1）

Packaging (1)

Belt and disk dimensions

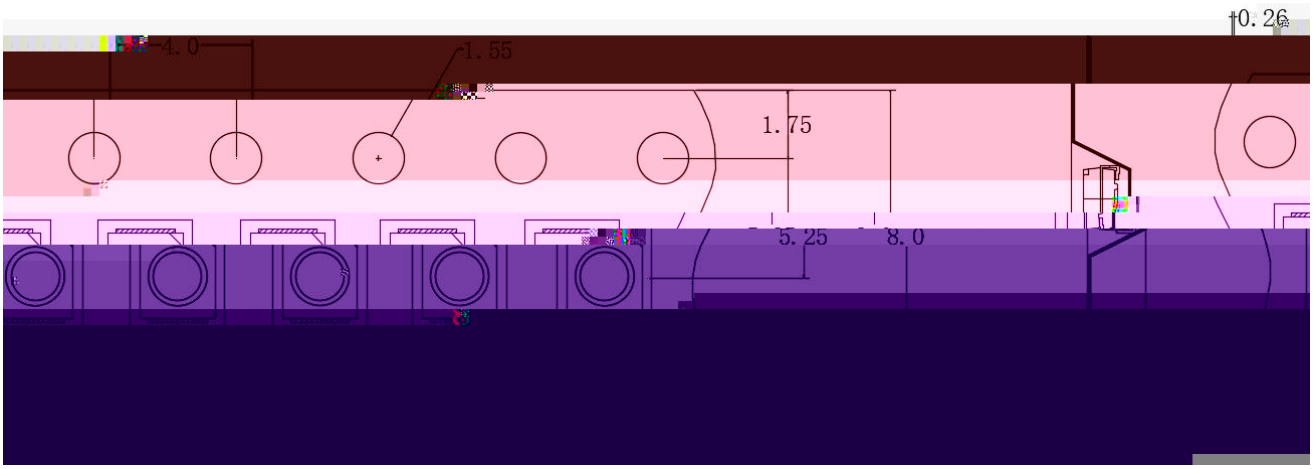

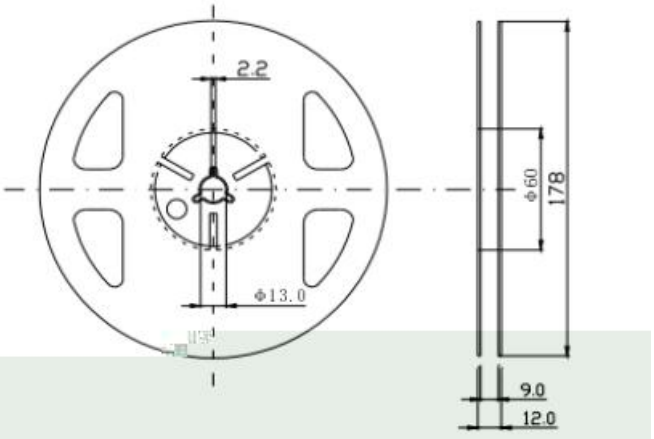

:

1. ㄚ β ㄣ (mm) Á

1. Size unit is mm (mm).

2. È ±0.1mm Â

2. The dimensional tolerance is ± 0.1mm.

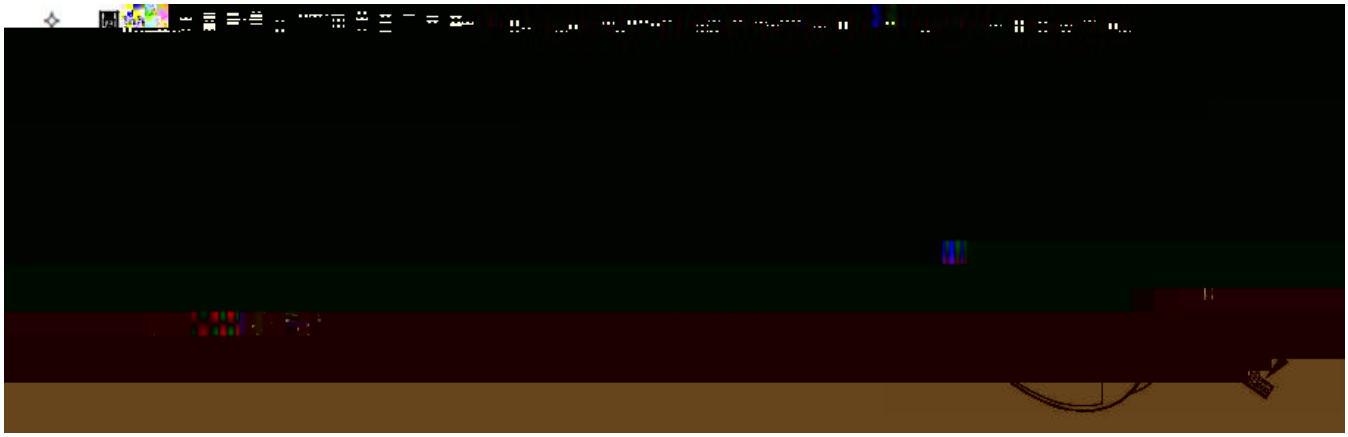

使用说明

Instructions (1)

1. 贮存：

Storage

¥ ˚˚ ج ą ´ ˘ ㅋ˘ ˚˚ ˜ w̄ Â

Moisture proof and anti-electrostatic package with moisture absorbent material is used, to keep moisture to a minimum.

¥ ╠˘ ˚˚ ج ضي ƀ ɢ 30Ņ˘ ƀ ɢ 60%RH Ţ Â

Before opening the package, the product shoulddube kept at 30Ņ or less and humidity less than 60% RH, and be used within a year.

¥ Ư˘ ˚˚ ج ضي ƀ ɢ 30Ņ˘ ƀ ɢ 40%RH Ţ˘ ƒ ضي 168 ˆ 7 ˜ ṗ ą Â ƀ ч ƀ ɢ 30Ņ

使用注意事项（2）

Precautions (2)

3. 设计建议

Design Consideration