[redacted]

波长分档

代码	最小值	最大值	单位	测试条件
HR02	620	625	nm	IF=20mA

[redacted]

The [illegible] conditions vary for different application areas

包装（1）

Packaging (1)

载带与圆盘尺寸

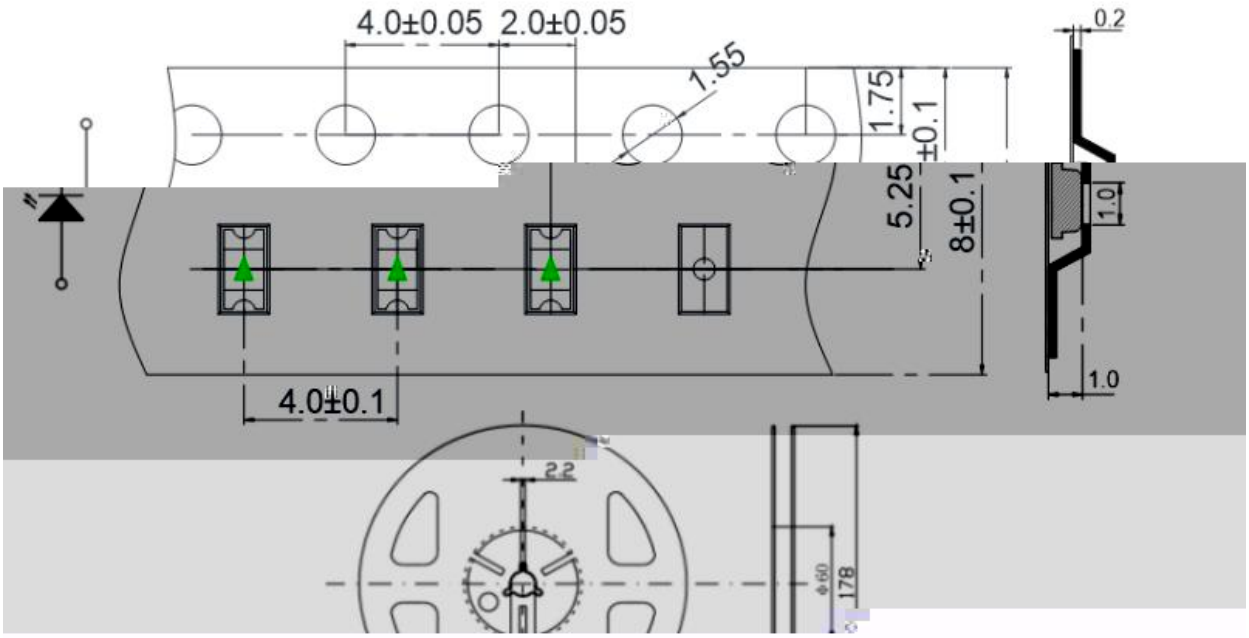

:

1. (mm)

1. Size unit is mm (mm).

2. ±0.1mm

2. The dimensional tolerance is ± 0.1mm.

Packaging (2)

使用注意事项（
Instructions (1)

贮存：

Moisture proof and anti-electrostatic package with moisture absorbent material is used, to keep moisture to a minimum.

30 60%RH

Before opening the package, the product should be kept at 30 or less and humidity less than 60% RH, and be used within a year.

使用注意事项（2）

Precautions (2)

设计建议

LED